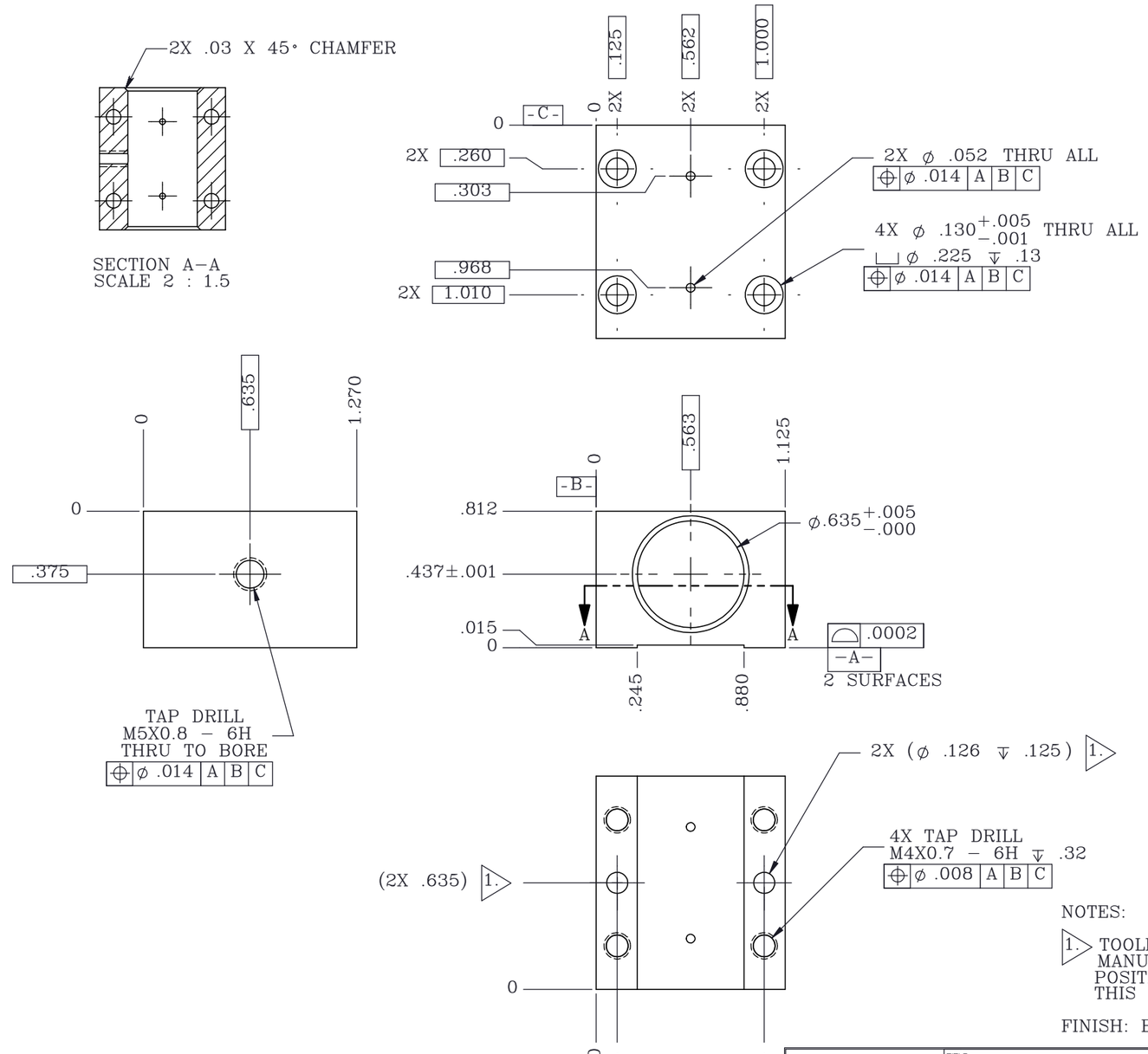

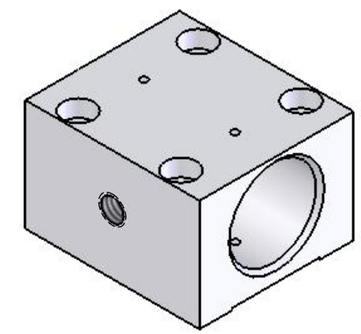

NOTES:

1. TOOLING HOLES SHOWN ARE PERMISSIBLE FOR MANUFACTURING PURPOSES ONLY. POSITION AND SIZE OF HOLES IS NOT CONTROLLED BY THIS DOCUMENT.

FINISH: BLACK ANODIZE PER MIL–A–8625, TYPE II, CLASS 2

PROPRIETARY ITEM:

THIS DRAWING CONTAINS INFORMATION PROPRIETARY TO NEW WAY MACHINE COMPONENTS, INC. ANY REPRODUCTION, DISCLOSURE, OR USE OF THIS DRAWING OR THE INFORMATION CONTAINED HEREIN IS EXPRESSLY PROHIBITED EXCEPT AS NEW WAY MAY OTHERWISE AGREE TO IN WRITING. ALL RIGHTS RESERVED BY NEW WAY MACHINE COMPONENTS, INC.

www.newwayairbearings.com

TOLERANCES UNLESS OTHERWISE SPECIFIED
ANGLES ± 1/2°
DECIMALS .XX .010
DECIMALS .XXX .005
FRACTIONS 1/64
SURFACE ROUGHNESS 63 RMS MAX.
BREAK ALL SHARP EDGES .005-.020

TITLE: PILLOW BLOCK, ø6.4MM			
DRAWN: MC	DATE: 12/27/2007	MATERIAL: 6061–T6 ALUMINUM	
CHECKED:	DATE:	HEAT TREAT:	
SCALE: 3:1.5	SHT. 1 OF 1		
USED ON:		FINISH: SEE NOTES	

NEWWAY® air bearings

EWO. NO.		
DWG. NO.	S8006P02	REV. C